**36-T10-BL1**
Trim Kit Only for Thermostatic Valve
For use with SS-TH1000 or SS-TH3000 concealed rough

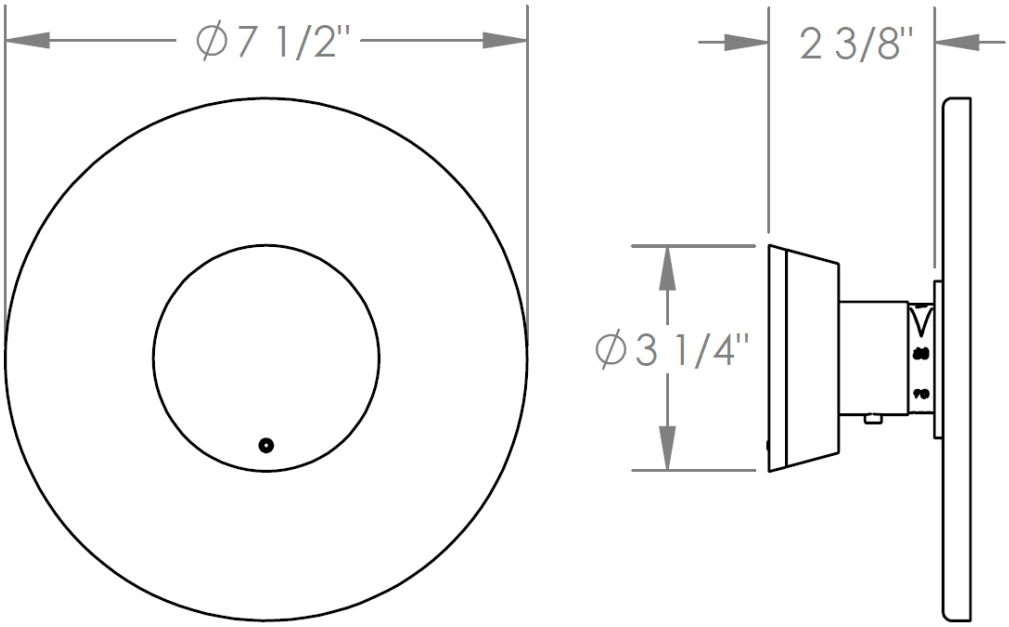


**WATERMARK DESIGNS 9/4/2018**
350 Dewitt Ave Brooklyn NY 11207 USA T 718 257 2800 F 718 257 2144 info@watermark-designs.com

**36-T10-CM**
Trim Kit Only for Thermostatic Valve
For use with SS-TH1000 or SS-TH3000 concealed rough

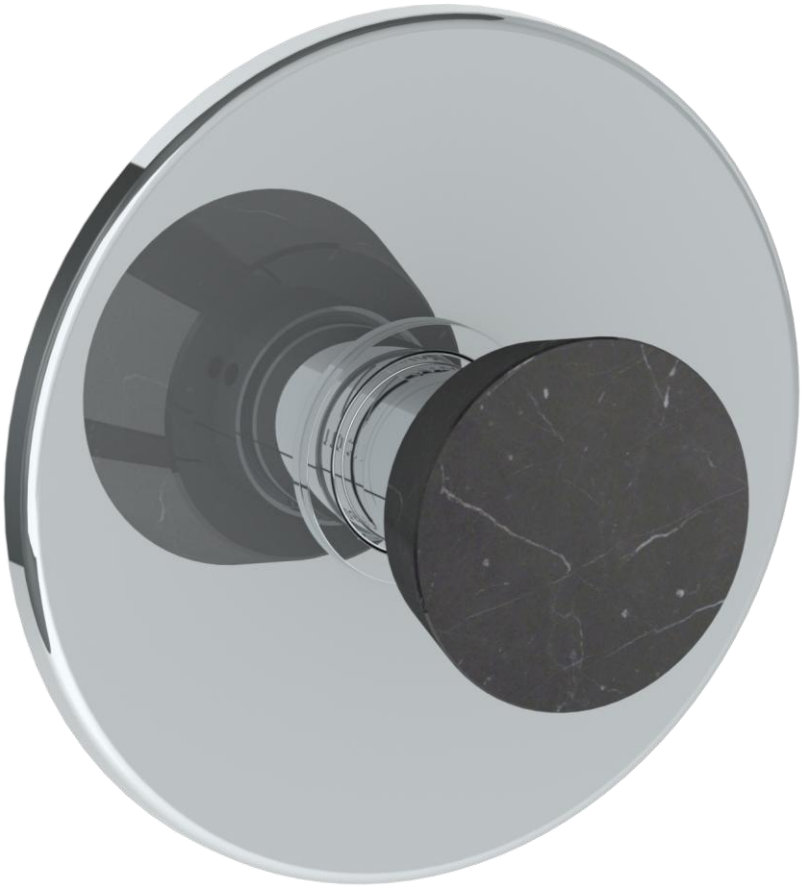

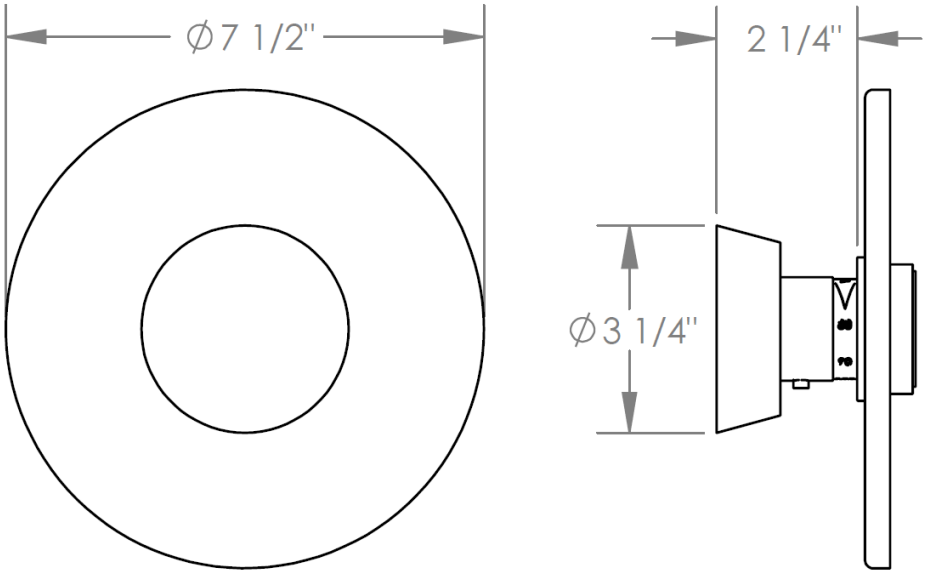


WATERMARK DESIGNS 8/24/2018
350 Dewitt Ave Brooklyn NY 11207 USA T 718 257 2800 F 718 257 2144 info@watermark-designs.com

**36-T10-WM**
Trim Kit Only for Thermostatic Valve
For use with SS-TH1000 or SS-TH3000 concealed rough

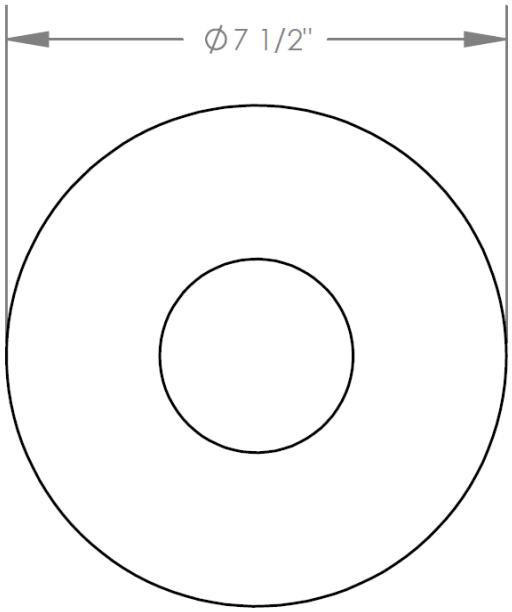


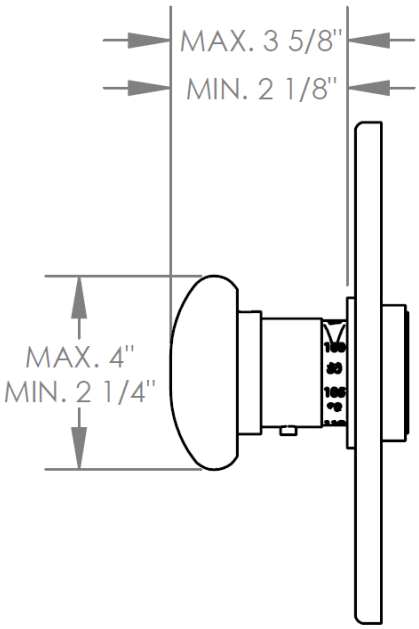


**WATERMARK DESIGNS 8/27/2018**
350 Dewitt Ave Brooklyn NY 11207 USA T 718 257 2800 F 718 257 2144 info@watermark-designs.com